Available online at www.sciencedirect.com

ScienceDirect

IFAC PapersOnLine 56-2 (2023) 11570–11577

Robustness of disturbance observer based servo systems ⋆

Kana Shikada * **Noboru Sebe** ** **Masayuki Sato** ***

* *Kyushu Institute of Technology, Japan (e-mail: shikada.kana104@mail.kyutech.jp)*
** *Kyushu Institute of Technology, Japan (e-mail: sebe@ics.kyutech.ac.jp)*
*** *Kumamoto University, Japan (e-mail: sato.masayuki@mech.kumamoto-u.ac.jp)*

Abstract: This paper gives a theoretical analysis of the robustness of servo systems with disturbance observers. The disturbance observers have been used as an easy way to enhance the robustness of servo systems because of their simple structure. However, the effectiveness has yet to be theoretically proved. Therefore, this paper aims to clarify the advantage of the disturbance observer. This paper considers the servo system consisting of a servo compensator and a disturbance observer. The servo system has robustness in suppressing the response variations against the system uncertainties. It is theoretically shown that the robustness comes from the systems having zeros of multiplicity two at $s = 0$, while the systems are type-1 servo systems. A numerical example is provided to confirm the theoretical result and to demonstrate the effectiveness of disturbance observers.

Copyright © 2023 The Authors. This is an open access article under the CC BY-NC-ND license (https://creativecommons.org/licenses/by-nc-nd/4.0/)

Keywords: Robust controller synthesis, Robustness analysis, Observers for linear systems, Disturbance observer.

1. INTRODUCTION

A disturbance observer is a control mechanism that estimates disturbances and cancels their effects. Ohishi *et al.* (1983) proposed a disturbance observer as a combination of the inverse system of the plant and a low pass filter. Johnson (1971) proposed a Luenbergar observer-based disturbance observer, which is an observer for an augmented system including a disturbance generating model. Independently of the above proposals, a new type of observer called the Proportional-Integral (PI) observer was proposed (Kaczorek, 1979). The PI observer includes an additional integral path in the conventional observer and is one of the higher-order controllers (Weinmann, 1991; Bakhshande and Söffker, 2015). The disturbance observer is regarded as a special case of the PI observer. Shafai and Carroll (1985) proposed the design method of the PI-observer for the time-varying multivariable systems, then Beale and Shafai (1989) proposed the design method of the PI-observer-based robust controller against the plant parameter variations. Furthermore, Ohnishi *et al.* (1996) proposed a structure of the servo controller with the Luenbergar-based disturbance observer. These controllers cancel out the effect of the disturbance with the feedback inputs of the estimated value.

The disturbance observers have a simple structure, and they easily improve the robustness of the servo performance. Therefore, disturbance observers are widely used for practical applications, especially in the robotics field. Furthermore, servo controller design methods with disturbance observers have been intensively studied. For example, Apte *et al.* (2020) applied disturbance observers for robust speed control design against permanent magnet synchronous motors. Liu *et al.* (2021) proposed to combine a disturbance observer and a neural network controller for the trajectory tracking controller design against the aircraft with model parameter uncertainties and unknown disturbances. Furthermore, a design method to obtain the state feedback gain and observer gain by solving the BMI problem based on the H_∞ norm was also proposed by Do *et al.* (2020). However, the effectiveness has yet to be theoretically proved. Sariyildiz and Ohnishi (2015) investigated the stability and robustness of the controllers with inverse model-based disturbance observers. Beale and Shafai (1989) discussed the robustness of the PI observers, but only from the viewpoint of the loop transfer recovery and not from the perspective of the variation of time responses. Furthermore, Mita *et al.* (1998) claimed that disturbance observers do not bring any advantage from the viewpoint of servo system design compared to the H_∞ control theory. Ogawa *et al.* (1993) showed that control systems with disturbance observers can be constructed from the general form of a two-degree-of-freedom (2-DOF) controller using the coprime factorization.

This paper aims to clarify the advantage of disturbance observers for the servo system with a servo compensator and a disturbance observer. Such a structure is referred to as the "disturbance-observer-based control system." This paper clarifies the robustness of disturbance-observer-based controllers and the underlying reasons for the robustness. Specifically, this paper theoretically shows that

⋆ This work was supported by JSPS KAKENHI Grant Number JP22H01512.

2405-8963 Copyright © 2023 The Authors. This is an open access article under the CC BY-NC-ND license.
Peer review under responsibility of International Federation of Automatic Control.
10.1016/j.ifacol.2023.10.454

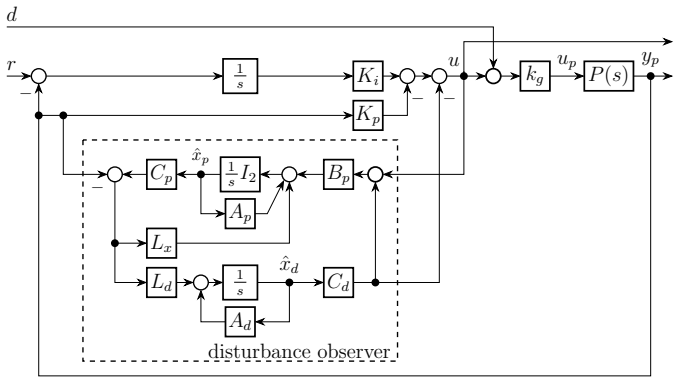

Fig. 1. Servo system with additional disturbance observer

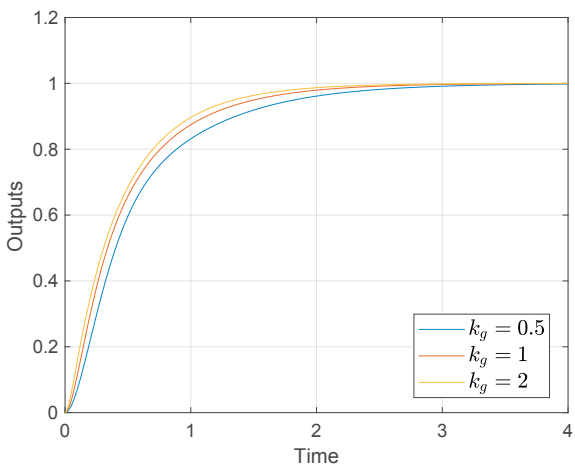

Fig. 2. Step responses without disturbance observer

the disturbance-observer-based control systems are type-1 servo systems, although they have double integrators in the closed-loop systems. On the other hand, the transfer function from disturbance to tracking error has zeros of multiplicity two at $s = 0$ in the complex plane, which leads to suppressing the variation of step response against the uncertainties. This is the robustness that the disturbance-observer-based control systems have. A numerical example is also provided to confirm the theoretical results and to demonstrate the effectiveness of the above discussion. The simultaneous design of feedback and observer gains can suppress the variation of the time response. However, the numerical example also shows that the disturbance-observer-based controller does not improve the rise time of the step response, i.e., the control performance in tracking performance.

Notations: The symbol $\mathbb{R}$ and $\mathbb{C}$ denote the sets of real and complex numbers, respectively. The identity matrix of size n is denoted by I_n, and the zero matrix of size $m \times n$ is denoted by $O_{m\times n}$. The zero matrices are occasionally denoted by O without the size. In general, signals are functions of time t. However, we do not explicitly describe they are functions of t for the sake of simplicity.

2. ADVANTAGES AND DISADVANTAGES OF ADDING DISTURBANCE OBSERVER

This section briefly reviews the advantages and disadvantages of adding a disturbance observer to a servo system through a numerical example. The considered servo system is shown in Fig. 1, and the main servo controller is constructed by a PI controller, whose gains are K_p and K_i. As shown in Fig. 1, an additional disturbance observer is attached to the PI servo system. Here, we show changes in control characteristics when a disturbance observer is added to the servo system with a PI controller. In Fig. 1, $P(s)$ represents the plant to be controlled, and its state-space coefficient matrices are given as follows:

$$\left[\begin{array}{c|c} A_p & B_p \\ \hline C_p & \end{array}\right] = \left[\begin{array}{cc|c} -1 & -3 & 1 \\ 3 & -3 & 3 \\ \hline -1 & 3 & \end{array}\right].$$

The signals $d \in \mathbb{R}$ and $u \in \mathbb{R}$ are used to evaluate the robustness against the multiplicative uncertainty. The parameter k_g denotes the input-side gain perturbation of the plant. The integral and proportional gains of the PI controller are set to $K_p = 2$ and $K_i = 5$, respectively. The disturbance observer is constructed with the observer gain $L = [4\ 14\ 100]^{\mathrm{T}}$. (The definition of disturbance observer is given in Section 3.) Figures 2 and 3 show the step responses with and without the disturbance observer, respectively. The step responses are shown for control input gains of $k_g = 0.5,\ 1,\ 2$. As shown in Fig. 3, the variations of the step responses are suppressed against the uncertainties. Figure 4 shows the magnitude plots of the closed-loop systems from d to u with $k_g = 1$, with which we can examine the robustness to the input-side multiplicative uncertainty. The servo system with the disturbance observer has a considerably large maximum gain. Therefore, it indicates

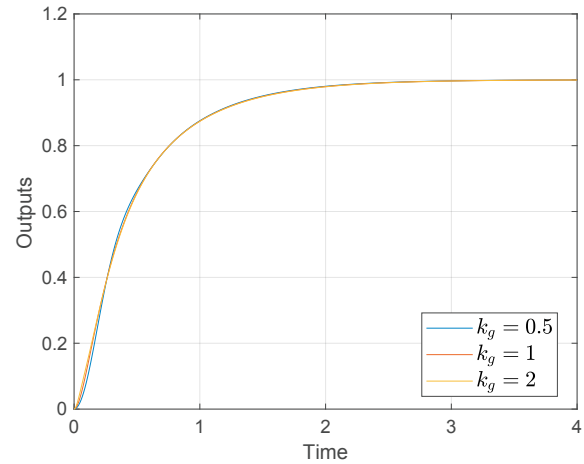

Fig. 3. Step responses with disturbance observer

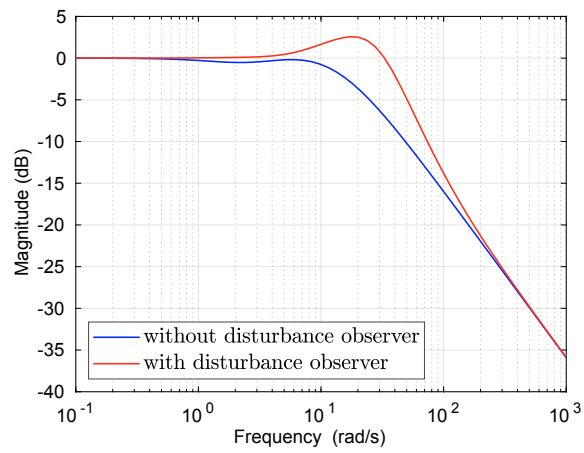

Fig. 4. Magnitude plot of closed-loop system from d to u

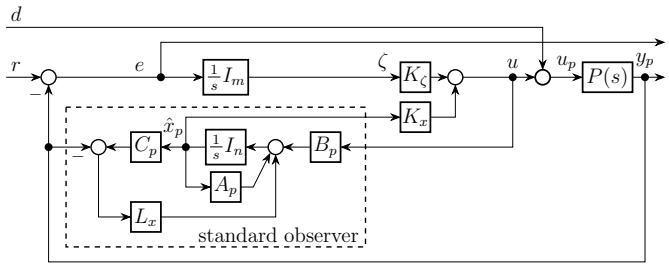

Fig. 5. Servo system with standard observer-based controller

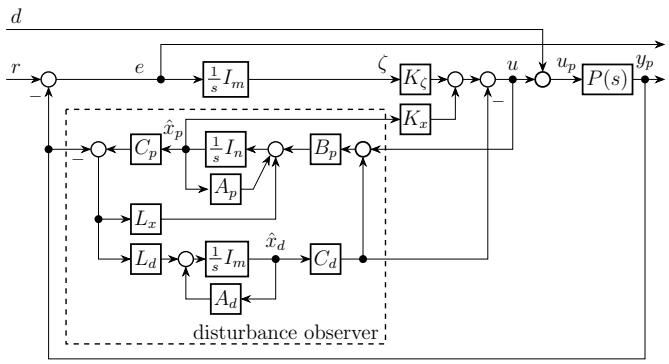

Fig. 6. Servo system with disturbance-observer-based controller

that the attached disturbance observer deteriorates the robustness in the general sense. This disadvantage was induced because the interaction between the disturbance observer and the original controller was not appropriately incorporated when designing them.

This paper theoretically clarifies the reason why the variations of time responses are suppressed with disturbance observers. Furthermore, the numerical examples show that the simultaneous design of feedback and observer gains can suppress the variations in time responses.

3. CHARACTERISTIC ANALYSIS OF SERVO SYSTEM WITH DISTURBANCE OBSERVER

3.1 Problem settings

This paper considers servo systems with observer-based controllers. The overall servo systems are shown in Figs. 5 and 6. In these figures, $P(s)$ denotes a given plant, and its state-space representation is given by

$$\dot{x}_p = A_p x_p + B_p u_p, \tag{1a}$$
$$y_p = C_p x_p. \tag{1b}$$

The signals $d \in \mathbb{R}^\ell$, $r \in \mathbb{R}^m$, $e = r - y_p \in \mathbb{R}^m$ and $\zeta \in \mathbb{R}^m$ are the disturbance, the reference input, the tracking error, and the state of the servo compensator, respectively. The gains $K_x \in \mathbb{R}^{\ell\times n}$ and $K_\zeta \in \mathbb{R}^{\ell\times m}$ are the state feedback gain and the integral gain, respectively.

Assumption 1. The numbers of control inputs and measurement outputs are the same, i.e., $\ell = m$.

Assumption 2. The given plant (1) has no zero at $s = 0$.

Assumption 3. The matrix A_p of the plant (1) has no zero eigenvalues.

Assumption 4. The pair $(A_p,\, B_p)$ is stabilizable.

Assumption 5. The pair $(C_p,\, A_p)$ is detectable.

Assumption 2 is required to construct a servo system, and Assumptions 4 and 5 are necessary to stabilize the given plant. On the other hand, Assumption 3 is a technical assumption, and this paper only deals with the systems satisfying Assumption 3.

This paper considers a servo system for a step reference signal. Therefore, the state transition matrix of the servo compensator is $A_i = O_{m\times m}$, and its state equation is given as follows:

$$\dot{\zeta} = A_i \zeta + r - y_p. \tag{2}$$

The augmented system with the servo compensator (2) added to the plant (1) is given as follows:

$$\begin{bmatrix} \dot{x}_p \\ \dot{\zeta} \end{bmatrix} = \begin{bmatrix} A_p & O \\ -C_p & A_i \end{bmatrix} \begin{bmatrix} x_p \\ \zeta \end{bmatrix} + \begin{bmatrix} B_p & O \\ O & I_m \end{bmatrix} \begin{bmatrix} u \\ r \end{bmatrix}. \tag{3}$$

From Assumptions 2 and 4, the augmented system (3) is stabilizable.

Standard observer The state equation of the full-order observer constructed for the plant (1) is given as follows:

$$\dot{\hat{x}}_p = (A_p + L_x C_p)\hat{x}_p + [\, -L_x \;\; B_p \,] \begin{bmatrix} y_p \\ u \end{bmatrix}, \tag{4}$$

where $L_x \in \mathbb{R}^{n\times m}$ is the observer gain. The standard observer is referred to in Section 4 for comparison with the disturbance observer.

Disturbance observer (Johnson, 1971) Assume that the disturbance d is generated by the following linear dynamical model:

$$\dot{x}_d = A_d x_d, \tag{5a}$$
$$d = C_d x_d, \tag{5b}$$

where $(C_d,\, A_d)$ is detectable. A disturbance observer is an observer for the augmented system consisting of the given plant (1) and the disturbance generating model (5). The augmented system is expressed as follows:

$$\begin{bmatrix} \dot{x}_p \\ \dot{x}_d \end{bmatrix} = \begin{bmatrix} A_p & B_p C_d \\ O & A_d \end{bmatrix} \begin{bmatrix} x_p \\ x_d \end{bmatrix} + \begin{bmatrix} B_p \\ O \end{bmatrix} u, \tag{6a}$$

$$y_p = [\, C_p \;\; O \,] \begin{bmatrix} x_p \\ x_d \end{bmatrix}. \tag{6b}$$

From Assumptions 2 and 5, the augmented system (6) is detectable.

Let $\hat{x}_p \in \mathbb{R}^n$ and $\hat{x}_d \in \mathbb{R}^m$ be the estimated states of the plant (1) and the disturbance (5), respectively, and the state equation of the disturbance observer is expressed as

$$\begin{aligned} \begin{bmatrix} \dot{\hat{x}}_p \\ \dot{\hat{x}}_d \end{bmatrix} &= \begin{bmatrix} A_p & B_p C_d \\ O & A_d \end{bmatrix} \begin{bmatrix} \hat{x}_p \\ \hat{x}_d \end{bmatrix} + \begin{bmatrix} B_p \\ O \end{bmatrix} u + \begin{bmatrix} L_x \\ L_d \end{bmatrix} (C_p \hat{x}_p - y_p) \\ &= \begin{bmatrix} A_p + L_x C_p & B_p C_d \\ L_d C_p & A_d \end{bmatrix} \begin{bmatrix} \hat{x}_p \\ \hat{x}_d \end{bmatrix} + \begin{bmatrix} -L_x & B_p \\ -L_d & O \end{bmatrix} \begin{bmatrix} y_p \\ u \end{bmatrix}, \end{aligned} \tag{7}$$

where $L_d \in \mathbb{R}^{m\times m}$ is the observer gain concerning the disturbance generating model. The control system shown in Fig. 6 includes a feedback to cancel out the disturbance estimated by the disturbance observer. In this paper, following Meditch and Hostetter (1973); Ohnishi *et al.* (1996), the disturbance is assumed to be a step signal, and accordingly, $A_d = O_{m\times m}$ and $C_d = I_m$. This type of disturbance observers have minor loops with integrators

structurally regardless of the plant models (Shikada and Sebe, 2023).

3.2 Poles of the closed-loop system

In the control system shown in Fig. 6, the servo compensator is combined with the disturbance observer. Therefore, there are two integrators, the servo compensator A_i and the disturbance generating model A_d. In this case, there are concerns about the servo system: i) The servo system is to be a type-2 servo system, and ii) the two integrators are uncontrollable or unobservable and not internally stabilized. This subsection shows that these problems do not arise.

The state-space representation of the closed-loop system shown in Fig. 6 is represented as follows:

$$\begin{bmatrix} \dot{x}_p \\ \dot{\zeta} \\ \dot{\hat{x}}_p \\ \dot{\hat{x}}_d \end{bmatrix} = \begin{bmatrix} A_p & B_pK_\zeta & B_pK_x & -B_pC_d \\ -C_p & A_i & O & O \\ -L_xC_p & B_pK_\zeta & A_p + B_pK_x + L_xC_p & O \\ -L_dC_p & O & L_dC_p & A_d \end{bmatrix} \begin{bmatrix} x_p \\ \zeta \\ \hat{x}_p \\ \hat{x}_d \end{bmatrix} + \begin{bmatrix} O & B_p \\ I_m & O \\ O & O \\ O & O \end{bmatrix} \begin{bmatrix} r \\ d \end{bmatrix}, \tag{8a}$$

$$\begin{bmatrix} y_p \\ e \end{bmatrix} = \begin{bmatrix} C_p & O & O & O \\ -C_p & O & O & O \end{bmatrix} \begin{bmatrix} x_p \\ \zeta \\ \hat{x}_p \\ \hat{x}_d \end{bmatrix} + \begin{bmatrix} O & O \\ I_m & O \end{bmatrix} \begin{bmatrix} r \\ d \end{bmatrix}. \tag{8b}$$

By applying the state transformation $\hat{x}_p \to \hat{x}_e = \hat{x}_p - x_p$ to the representation (8), the following expression is obtained:

$$\begin{bmatrix} \dot{x}_p \\ \dot{\zeta} \\ \dot{\hat{x}}_e \\ \dot{\hat{x}}_d \end{bmatrix} = \begin{bmatrix} A_p + B_pK_x & B_pK_\zeta & B_pK_x & -B_pC_d \\ -C_p & A_i & O & O \\ O & O & A_p + L_xC_p & B_pC_d \\ O & O & L_dC_p & A_d \end{bmatrix} \begin{bmatrix} x_p \\ \zeta \\ \hat{x}_e \\ \hat{x}_d \end{bmatrix} + \begin{bmatrix} O & B_p \\ I_m & O \\ O & -B_p \\ O & O \end{bmatrix} \begin{bmatrix} r \\ d \end{bmatrix}, \tag{9a}$$

$$\begin{bmatrix} y_p \\ e \end{bmatrix} = \begin{bmatrix} C_p & O & O & O \\ -C_p & O & O & O \end{bmatrix} \begin{bmatrix} x_p \\ \zeta \\ \hat{x}_e \\ \hat{x}_d \end{bmatrix} + \begin{bmatrix} O & O \\ I_m & O \end{bmatrix} \begin{bmatrix} r \\ d \end{bmatrix}. \tag{9b}$$

From the representation (9), similar to the ordinary observer-based control systems, the state of the disturbance observer $[\hat{x}_e^{\mathrm{T}}\ \hat{x}_d^{\mathrm{T}}]^{\mathrm{T}}$ is uncontrollable from r, and the dynamics of the disturbance observer does not appear in the transfer function from r to y_p. In other words, the dynamics from r to y_p is determined by the upper left 2×2 block of the matrix in (9a) and is that of a type-1 servo system. For this reason, the tracking performance, such as the faster response, is identical to the standard observer-based controller and is not improved. On the other hand, the dynamics of the disturbance observer is characterized by the lower right 2×2 block of the matrix in (9a). The closed-loop systems corresponding to the left upper and right lower 2×2 block matrices are stabilized by the feedback gains K_x and K_ζ, and by the observer gains L_x and L_d, respectively.

3.3 Zeros of the closed-loop system

Let $x_{cl} = [x_p^{\mathrm{T}}\ \zeta^{\mathrm{T}}\ \hat{x}_e^{\mathrm{T}}\ \hat{x}_d^{\mathrm{T}}]^{\mathrm{T}} \in \mathbb{R}^{n_{cl}}$ be the state of the closed-loop system (9), then the state-space representation of the closed-loop system from d to e is given as follows:

$$\dot{x}_{cl} = A_{cl}x_{cl} + B_{cl}d, \tag{10a}$$

$$e = C_{cl}x_{cl} + D_{cl}d, \tag{10b}$$

where the matrices $A_{cl} \in \mathbb{R}^{n_{cl} \times n_{cl}}$, $B_{cl} \in \mathbb{R}^{n_{cl} \times m}$, $C_{cl} \in \mathbb{R}^{m \times n_{cl}}$ and $D_{cl} = O_{m \times m}$ are the state-space matrices of the closed-loop system from d to e.

The following theorem holds for the structure of zeros of the closed-loop system (10).

Theorem 1. Suppose that the system (10) is stabilized by K_x, K_ζ, L_x and L_d. Then, the transfer function from d to e of the closed-loop system (10) has m zeros of multiplicity two at $s = 0$.

Proof. As shown in Proposition 1 in Appendix A, the zeros of the system are characterized by the Rosenbrock system matrix. First, we show that the closed-loop system (10) has m zeros at $s = 0$. Let the matrices V_{11} and V_{12} be $V_{11} = [O\ O\ O\ I_m]^{\mathrm{T}} \in \mathbb{R}^{n_{cl} \times m}$ and $V_{12} = I_m$. Then, remember that $A_d = O_{m \times m}$ and $C_d = I_m$, we have

$$\left[\begin{array}{c|c} A_{cl} & B_{cl} \\ \hline C_{cl} & D_{cl} \end{array}\right] \left[\begin{array}{c} V_{11} \\ \hline V_{12} \end{array}\right] = \left[\begin{array}{cccc|c} A_p + B_pK_x & B_pK_\zeta & B_pK_x & -B_pC_d & B_p \\ -C_p & A_i & O & O & O \\ O & O & A_p + L_xC_p & B_pC_d & -B_p \\ O & O & L_dC_p & A_d & O \\ \hline -C_p & O & O & O & O \end{array}\right] \left[\begin{array}{c} O \\ O \\ O \\ I_m \\ \hline I_m \end{array}\right] = \left[\begin{array}{c} O \\ O \\ O \\ O \\ \hline O \end{array}\right]. \tag{11}$$

The equation (11) implies that the system (10) has m zeros at $s = 0$ and the corresponding zero vectors are the columns of $[V_{11}^{\mathrm{T}}\ V_{12}^{\mathrm{T}}]^{\mathrm{T}}$.

Next, we show that each zero at $s = 0$ is of multiplicity two. If the multiplicities of the zeros are two, there exists a matrix $V_2 \in \mathbb{C}^{(n_{cl}+m) \times m}$ such that (12) holds.

$$\left[\begin{array}{c|c} A_{cl} & B_{cl} \\ \hline C_{cl} & D_{cl} \end{array}\right] V_2 = \left[\begin{array}{c} V_{11} \\ \hline O \end{array}\right]. \tag{12}$$

If the matrix V_2 which satisfies the equation (12) exists, each column is a zero vector corresponding to a zero of multiplicity two. However, it is difficult to construct V_2 satisfying (12). Therefore, we show that the equation (12) has a solution by showing that the equation (13) holds.

$$\mathrm{rank} \left[\begin{array}{c|c} A_{cl} & B_{cl} \\ \hline C_{cl} & D_{cl} \end{array}\right] = \mathrm{rank} \left[\begin{array}{c|c|c} A_{cl} & B_{cl} & V_{11} \\ \hline C_{cl} & D_{cl} & O \end{array}\right]. \tag{13}$$

The left side of (13) is given as

$$\mathrm{rank} \left[\begin{array}{cccc|c} A_p + B_pK_x & B_pK_\zeta & B_pK_x & -B_pC_d & B_p \\ -C_p & A_i & O & O & O \\ O & O & A_p + L_xC_p & B_pC_d & -B_p \\ O & O & L_dC_p & A_d & O \\ \hline -C_p & O & O & O & O \end{array}\right]. \tag{14}$$

Remember that $A_i = O_{m \times m}$, subtracting the second row from the fifth row, (14) is equal to

$$\mathrm{rank} \left[\begin{array}{cccc|c} A_p + B_pK_x & B_pK_\zeta & B_pK_x & -B_pC_d & B_p \\ -C_p & A_i & O & O & O \\ O & O & A_p + L_xC_p & B_pC_d & -B_p \\ O & O & L_dC_p & A_d & O \\ \hline O & O & O & O & O \end{array}\right]. \tag{15}$$

Since the closed-loop system (10) is stable, the matrix in the upper left 4×4 block of the matrix in (15) has no zero eigenvalues. Therefore, (15) is equal to n_{cl}. The same procedures lead to the right hand side of (13) is equal to

$$\operatorname{rank}\left[\begin{array}{cccc|c|c} A_p + B_pK_x & B_pK_\zeta & B_pK_x & -B_pC_d & B_p & O \\ -C_p & A_i & O & O & O & O \\ O & O & A_p + L_xC_p & B_pC_d & -B_p & O \\ O & O & L_dC_p & A_d & O & I_m \\ \hline O & O & O & O & O & O \end{array}\right]. \tag{16}$$

The rank (16) is n_{cl} for the same reason as (15). Therefore, the equation (13) holds. □

In the case of the servo systems with standard observers, the transfer function from d to e has zeros of multiplicity one at $s = 0$. Contrarily, as shown by Theorem 1, with disturbance observers, the transfer function from d to e has zeros of multiplicity two at $s = 0$. This fact implies that the disturbance observer reduces the gain of the transfer function in the low frequency range. As claimed by Meditch and Hostetter (1973); Ohnishi *et al.* (1996), the signal d represents not only the originally modeled disturbance but also the signal variation caused by uncertainties. Therefore, the disturbance observer reduces the effect of uncertainties. Note that Theorem 1 also implies that the transfer function from d to y_p has zeros of multiplicity two at $s = 0$.

4. NUMERICAL EXAMPLE

In this numerical example, two servo systems are constructed against a third-order system. One is with a standard observer-based controller, and the other is with a disturbance-observer-based controller, which are the 2-DOF versions of controllers shown in Figs. 5 and 6, respectively. The controllers are designed based on the multi-model design approach (Ackermann, 1985) by hinfstruct() in MATLAB®.

4.1 Problem settings

The matrices of the state-space representation of the plant are given as follows:

$$\left[\begin{array}{c|c} A_p & B_p \\ \hline C_p & \end{array}\right] = \left[\begin{array}{ccc|c} 6 & -4 & 0 & 0 \\ 6 & 1 & -9 & 0 \\ -8 & -5 & 2 & 2 \\ \hline 3 & 0 & 0 & \end{array}\right].$$

This numerical example considers the uncertainty (gain fluctuation) at the control input. Let δ be the gain fluctuation, and its magnitude is set to $|\delta| = 0.8$. The controllers, i.e., the feedback and observer gains, are designed to minimize the worst H_∞ norms of the two systems corresponding to the uncertainties $\delta = \pm 0.8$.

The generalized plants used in the controller designs are shown in Figs. 7 and 8, where the parameter k_g denotes the control input gain $k_g = 1 + \delta$. The parameters α and β are the parameters of the servo weight function. The parameter α specifies the vibration suppression performance, and the parameter β specifies the rise time of the time response. This numerical example sets these parameters to $\alpha = 0.9$ and $\beta = 0.3$. The input signal w_1 is the input disturbance corresponding to d in Figs. 5 and 6, and its

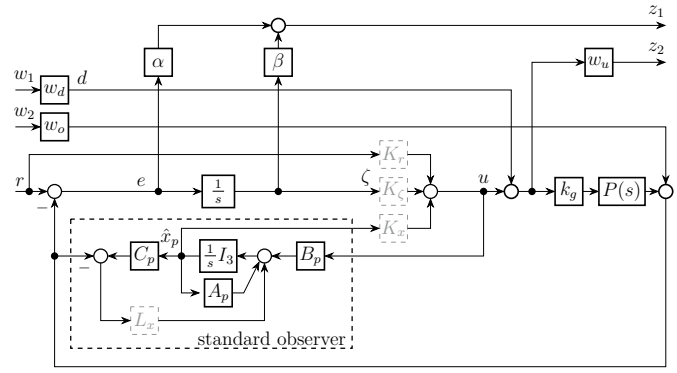

Fig. 7. Generalized plant for standard observer-based controller design

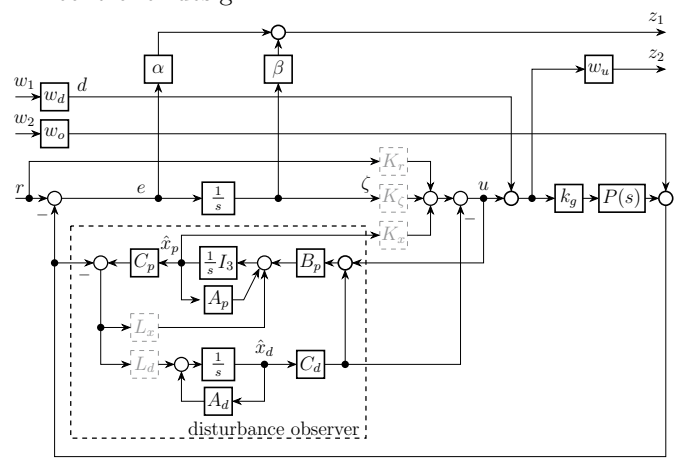

Fig. 8. Generalized plant for disturbance-observer-based controller design

magnitude is $w_d = 0.07$. The output signal z_2 evaluates the magnitude of the control input, and its weight is $w_u = 0.1$. Also, the input signal w_2 is an output disturbance, and its magnitude is $w_o = 10^{-4}$. This output disturbance is added to prevent the absolute values of the observer poles from becoming excessively large.

4.2 Design results

The controllers are designed based on the multi-model approach and minimize the H_∞ norm of the worst-case models with uncertainties of $\delta = \pm 0.8$. Let $K_r \in \mathbb{R}$ be the feed-forward gain. As a result, the following gains are obtained for the standard observer-based controller.

$$[K_r \ K_\zeta] = \left[\, 1.7518 \ \ 1.0649 \times 10^2 \,\right],$$
$$K_x = \left[\, -1.3845 \times 10^3 \ \ 6.9148 \times 10^2 \ \ -3.6325 \times 10^2 \,\right],$$
$$L_x = \left[\, 2.9070 \times 10^3 \ \ -1.8634 \times 10^4 \ \ 4.3660 \times 10^5 \,\right]^{\mathrm{T}}.$$

Similarly, the gains for the disturbance-observer-based controller are obtained as follows:

$$[K_r \ K_\zeta] = [\, 2.4688 \ \ 6.1468 \times 10 \,],$$
$$K_x = \left[\, -1.0022 \times 10^3 \ \ 5.5966 \times 10^2 \ \ -3.8035 \times 10^2 \,\right],$$
$$L_d = 4.3958 \times 10^5,$$
$$L_x = \left[\, 1.3594 \times 10^3 \ \ -1.0549 \times 10^4 \ \ 2.0637 \times 10^5 \,\right]^{\mathrm{T}}.$$

The achieved H_∞ norms by the designed two controllers are 0.9752 and 0.9745, respectively, and are almost identical. Let $T_{ed}(s)$ be the nominal transfer function from d to

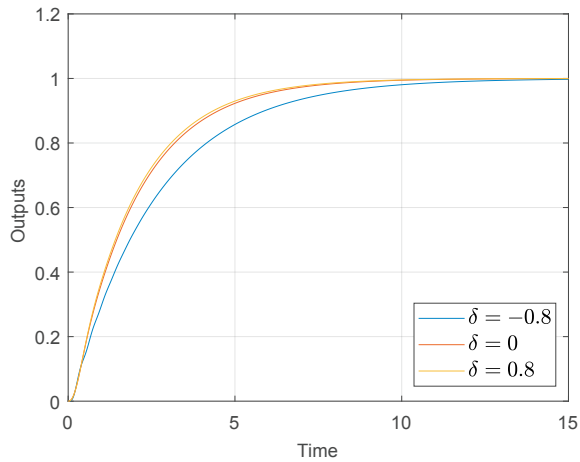

Fig. 9. Step responses with standard observer-based controller

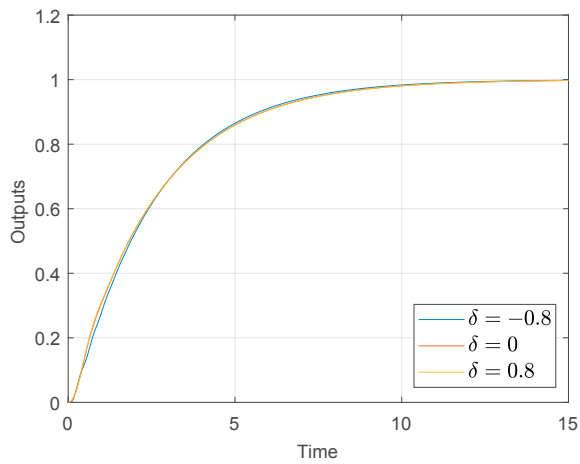

Fig. 10. Step responses with disturbance-observer-based controller

e. The transfer function $T_{ed}(s)$ with the standard observer-based controller is obtained as follows:

$$T_{ed}(s) = \frac{-216s}{(s+8690)(s+707.2)(s+0.5274)} \times \frac{(s+697.2)(s+8690)(s+51.34)}{(s^2+9.786s+61.67)(s^2+22.11s+5332)}. \tag{17}$$

Similarly, the transfer function $T_{ed}(s)$ with the disturbance-observer-based controller is obtained as follows:

$$T_{ed}(s) = \frac{-216s^2}{(s+4042)(s+745.4)(s+4.43)(s+0.3992)} \times \frac{(s+743.7)(s+4043)(s+52.58)}{(s^2+5.908s+44.62)(s^2+22.52s+5302)}. \tag{18}$$

The transfer function (18) shows that the closed-loop system with the disturbance-observer-based controller has a zero of multiplicity two at $s = 0$, while the transfer function (17) with the standard observer-based controller has a zero of multiplicity one at $s = 0$.

Figures 9 and 10 show the step responses with the two types of observers. In each simulation, the uncertainty δ is set to $\delta = 0, \pm 0.8$. As shown in Figs. 9 and 10, the variations of the outputs of the servo system with

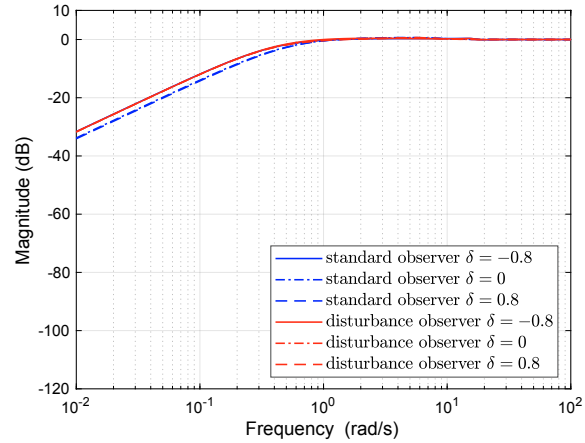

Fig. 11. Magnitude plot of the system from r to e

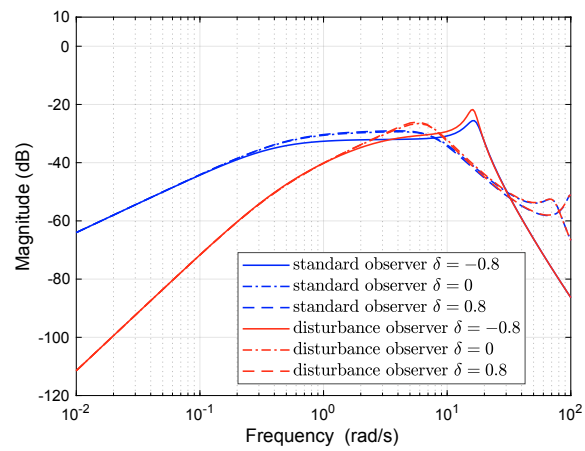

Fig. 12. Magnitude plot of the system from d to e

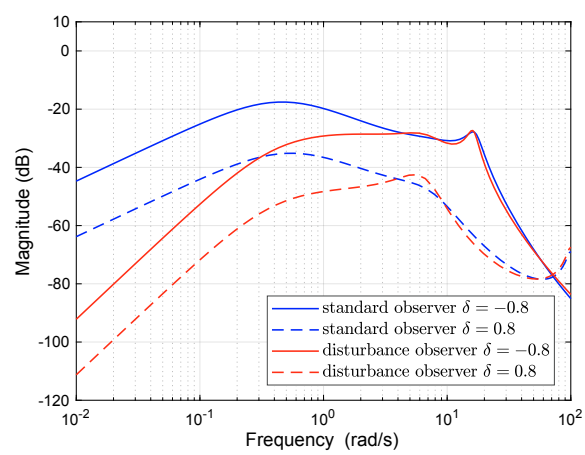

Fig. 13. Magnitude plot of the difference between the nominal and perturbed systems $G(s,\delta) - G(s,0)$

the disturbance observer are smaller than those with the standard observer.

Remark 1. Note that the step responses in Fig. 10 almost coincide with the slowest step response in Fig. 9. This implies that there is no performance improvement, such as faster responses. Only the variation in step responses is reduced. More precisely, the disturbance-observer-based controller suppresses the response variations by slowing down the faster responses of $\delta = 0$ and 0.8.

Figure 11 shows the magnitude plots of the systems from r to e with the standard and disturbance observer-based controllers. The gain fluctuation δ is set to $\delta = 0, \pm 0.8$. All of them have slopes of 20 [dB/dec] at low frequencies, which confirms that the closed-loop systems are type-1 servo systems.

Figure 12 shows the magnitude plots of the systems from d to e with the standard and disturbance observer-based controller with the same gain fluctuation values as in Fig. 11. Contrarily to Fig. 11, the slopes of the plots are 20 [dB/dec] for the systems with the standard observer-based controller, and 40 [dB/dec] for the systems with the disturbance-observer-based controller at the low frequencies. This is because these two closed-loop systems have zeros at $s = 0$ with different multiplicities, as shown in Section 3.

In order to evaluate the variations of the step responses, let us define $G(s, \delta)$ as the closed-loop transfer function from r to y_p with the uncertainty δ. Since the closed-loop systems with the standard and disturbance observers are type-1 servo systems, the ordinary sensitivity functions of both closed-loop systems have slopes of 20 [dB/dec]. Therefore, the ordinary sensitivity function is inadequate for evaluating the robustness of the 2-DOF control systems. Instead of the ordinary sensitivity function, this paper evaluates the difference $G(s, \delta) - G(s, 0)$ to clarify the effect of the disturbance observer on the variations of the closed-loop systems caused by the uncertainties. Figure 13 shows the magnitude plots of the difference $G(s, \delta) - G(s, 0)$. These plots show that the servo systems with the standard observer-based controllers have slopes of 20 [dB/dec] in the low-frequency range, whereas the servo systems with the disturbance-observer-based controllers have slopes of 40 [dB/dec] in the low-frequency range. These are provoked by the frequency characteristics at the low-frequency range as shown in Fig. 12. It indicates that the effect of the uncertainty is suppressed in the low-frequency range. Furthermore, the difference in the magnitude at low frequencies indicates the difference in the robustness against the uncertainty. This difference shows why the disturbance observers suppress the variations of the step responses more efficiently.

5. CONCLUSION

This paper investigates the robust control performance of disturbance observers and clarifies the theoretical reason for the effectiveness of disturbance observers. The control system with a disturbance observer has zeros of multiplicity two at $s = 0$ in the transfer function from the disturbance to the output while maintaining the type-1 servo characteristics from the reference inputs to the outputs. These double zeros improve the robustness at the low frequencies and suppress the variation of the step responses against the uncertainties.

Our future work is to propose a more practical design procedure for disturbance observers. Since there should be a trade-off between the general tracking performance and the robustness of the response variations, a design procedure that considers such a trade-off is required for practical use.

REFERENCES

Ackermann, J. (1985). Multi-model approaches to robust control system design. *IFAC Proceedings Volumes*, 18(3), 1–6.

Apte, A., Joshi, V.A., Mehta, H., and Walambe, R. (2020). Disturbance-Observer-Based Sensorless Control of PMSM Using Integral State Feedback Controller. *IEEE Transactions on Power Electronics*, 35(6), 6082–6090.

Bakhshande, F. and Söffker, D. (2015). Proportional-integral-observer: A brief survey with special attention to the actual methods using ACC benchmark. *IFAC-PapersOnLine*, 48(1), 532–537. 8th Vienna International Conferenceon Mathematical Modelling.

Beale, S. and Shafai, B. (1989). Robust control system design with a proportional integral observer. *International Journal of Control*, 50(1), 97–111.

Do, M.-H., Koenig, D., and Theilliol, D. (2020). Robust H_∞ proportional-integral observer-based controller for uncertain LPV system. *Journal of the Franklin Institute*, 357(4), 2099–2130.

Gantmacher, F. (ed.) (1989). *The Theory of Matrices*. Chelsea Publishing Company.

Johnson, C. (1971). Accomodation of external disturbances in linear regulator and servomechanism problems. *IEEE Transactions on Automatic Control*, 16(6), 635–644.

Kaczorek, T. (1979). Proportional-integral observers for linear multivariable time-varying systems. *Automatisierungstechnik*, 27(1-12), 359–363.

Liu, S., Whidborne, J.F., and Chumalee, S. (2021). Disturbance Observer Enhanced Neural Network LPV Control for a Blended-Wing-Body Large Aircraft. *IEEE Transactions on Aerospace and Electronic Systems*, 57(5), 2689–2703.

Meditch, J.S. and Hostetter, G.H. (1973). Observers for systems with unknown and inaccessible inputs. In *1973 IEEE Conference on Decision and Control including the 12th Symposium on Adaptive Processes*, 120–124.

Mita, T., Hirata, M., Murata, K., and Zhang, H. (1998). H_∞ control versus disturbance-observer-based control. *IEEE Trans. Ind. Electron.*, 45, 488–495.

Ogawa, T., Suzuki, T., Matsumoto, K., Okuma, S., Kamiyama, K., and Ohno, K. (1993). Internal structure of two-degree-of-freedom controller and its application to vibration suppression control. In *IECON '93 - 19th Annual Conference of IEEE Industrial Electronics*, 2138–2143 vol.3.

Ohishi, K., Ohnishi, K., and Miyachi, K. (1983). Torque-speed regulation of DC motor based on load torque estimation method. In *JIEE/1983 International power electronics conference (IPEC)*, 1209–1218.

Ohnishi, K., Shibata, M., and Murakami, T. (1996). Motion control for advanced mechatronics. *IEEE/ASME Transactions on Mechatronics*, 1(1), 56–67.

Sariyildiz, E. and Ohnishi, K. (2015). Stability and robustness of disturbance-observer-based motion control systems. *IEEE Transactions on Industrial Electronics*, 62(1), 414–422.

Shafai, B. and Carroll, R. L. (1985). Design of proportional-integral observer for linear time-varying multivariable systems. In *24th IEEE Conference on Decision and Control*, 597–599.

Shikada, K. and Sebe, N. (2023). Relation between disturbance observer and model error compensator. In *2023 SICE International Symposium on Control Systems (SICE ISCS)*. 6 pages.

Weinmann, A. (1991). *Uncertain Models and Robust Control*. Springer Vienna.

The MathWorks, Inc (2022). MATLAB. URL `https://www.mathworks.com/products/matlab.html`. (Version 2022a).

Appendix A. STRUCTURE OF ZEROS

Let a given system be

$$\dot{x} = Ax + Bu, \tag{A.1a}$$

$$y = Cx + Du, \tag{A.1b}$$

where $x \in \mathbb{R}^n$, $u \in \mathbb{R}^m$ and $y \in \mathbb{R}^m$ are the state, input and output of the system, respectively. For the system (A.1), the matrix

$$\begin{bmatrix} A - sI_n & B \\ C & D \end{bmatrix} \tag{A.2}$$

is called the Rosenbrock system matrix of system (A.1).

Proposition 1. (Gantmacher, 1989). For a Rosenbrock system matrix (A.2), there exist non-singular matrices P, $Q \in \mathbb{C}^{(n+m)\times(n+m)}$, a nonnegative integer r, a Jordan matrix $\Lambda \in \mathbb{C}^{(n-r)\times(n-r)}$ and a nilpotent $N \in \mathbb{C}^{(r+m)\times(r+m)}$ such that

$$P \begin{bmatrix} A - sI_n & B \\ C & D \end{bmatrix} Q = \begin{bmatrix} \Lambda - sI_{n-r} & O \\ O & I_{r+m} - sN \end{bmatrix} \quad ({}^\forall s \in \mathbb{C}). \tag{A.3}$$

Let us decompose Q as

$$Q = \begin{bmatrix} Q_{11} & Q_{12} \\ Q_{21} & Q_{22} \end{bmatrix}, \tag{A.4}$$

where $Q_{11} \in \mathbb{C}^{n\times(n-r)}$, $Q_{12} \in \mathbb{C}^{n\times(r+m)}$, $Q_{21} \in \mathbb{C}^{m\times(n-r)}$ and $Q_{22} \in \mathbb{C}^{m\times(r+m)}$. Then,

$$\begin{bmatrix} A & B \\ C & D \end{bmatrix} \begin{bmatrix} Q_{11} \\ Q_{21} \end{bmatrix} = \begin{bmatrix} Q_{11} \\ O \end{bmatrix} \Lambda \tag{A.5}$$

holds. This equation represents the multiplicity structure of the finite zeros of system (A.1).